KONDAŞ KONDANSATÖRLERİ

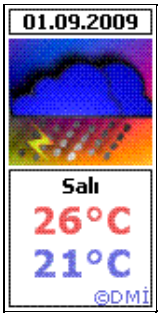

Ziyaretçi Durumu	
Aktif	4
Toplam	4403

ZnPP Type Low Voltage Power Capacitors

Description of the ZnPP Type Capacitors:
The dielectric is low loss polypropylene film and the electrodes are consist of a very thin metal coating on one side of the PP film layer coated under vacuum conditions. Two layer of metallized PP are wound into cylindrical windings. The windings are named as the Capacitor Elements. After metal spray application of both sides of the windings, the wire connections are provided. Those single phase capacitor elements are dehydrated under high vacuum conditions, impregnated with highly purified gas. The Capacitor Elements are encapsulated in a polyurethane resin having a high class insulation and mounted sheet steel case. They are internally connected in delta position to give the required three phase output.

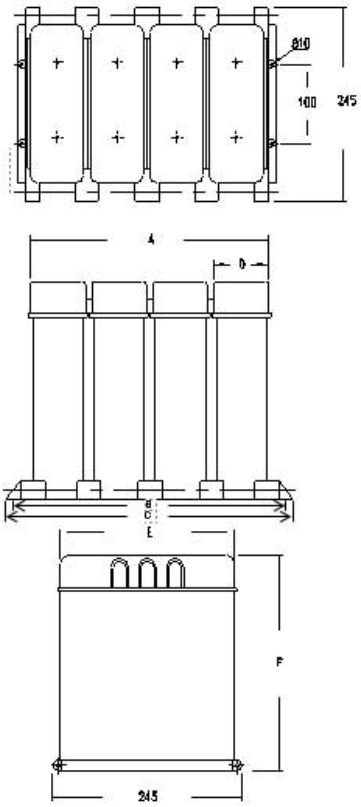

LONG LIFE:
KONDAŞ ZnPP Capacitors are described as ?selfhealing?. This means that they are capable of restoring. After occurring short circuit between the electrodes, the metal layers around the short circuit are vaporized and short circuit is terminated. Due to the that fact; KONDAŞ CAPACITORS are long lasting.

CONSTRUCTIONS:
ZnPP Capacitors are consist of Self - Healing metallized polypropylene film, polyurethane resin, plastic can and sheet steel box. All capacitors are equipped with discharge resistor.

APPLICATIONS:
ZnPP type capacitors have been designed for easy and quick assembly in banks. These are modular capacitors are used in automatic or manual power factor correction panels for low voltage applications

PRODUCTION RANGE:
Other than products for different values of voltage, frequency, capacity and temperature those stated in the table 1 are also included in our production line.

NON POLLUTING:
All the materials used on KONDAŞ CAPACITORS are non-toxic and completely environmentally compatible.

SPECIAL REQUIREMENTS:
Our technical department is always ready to solve your special requirements.

DIMENSIONS:
ZnPP Capacitors have standard dimensions. You can find dimensions and other details in the tables 5-11

Technical Specifications :

Rated Output: As shown tables 5-11
Operating Temperature Range: -25/D (-25 / +55 ºC)
Capacitance Tolerance: -5 +10 %
Working Voltages (Un): 400 V (others as shown table 3)

Working Frequency: 50 Hz
Installation: : Indoor or Outdoor
Permitted Over Voltages: As shown tables 2
Permitted Over Current: 1,3 In
M12 Nuts of Terminals Torque: 10 N.m
Dielectric Losses (Tan? -dissipation fact.): <0.5 W/kVAr
Test Voltage Between Terminals: 2,15 Un AC, 2 sec
Test Voltage Between Terminals and Case: 3 KV AC, 10 sec
Altitude: 2000 m. a.s.l.
Discharge Resistor: Internal or External . 50 V after 60 sec.
Reference Standards: Capacitors meet or exceed of TS 804; IEC 831-1/2; TS EN 60831
KONDAŞ Quality Assurance Standards: TS EN ISO 9001-2000 Our quality system is described in KONDAŞ Quality Manuel.

(*)-Aproval Pending

İLGİLİ TABLOLARI GÖRMEK İÇİN TIKLAYINIZ

Copyright © 2009 Kondaş A.Ş.
Mumhane cad. Emek İş Hanı No: 31 /1 PK: 80030 Karaköy / İstanbul TÜRKİYE
Tel:(0212) 251 53 45 - 244 01 50 Fax:(0212) 244 00 04