- Dökümanlar
- Kalite Politikamız
- Ürünlerimiz
- Sipariş Veriniz
- Site Haritası
- **Üye Girişi**

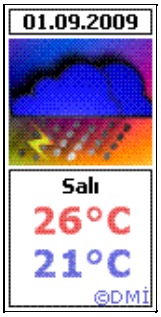

Ziyaretçi Durumu	
Aktif	5
Toplam	4404

AsVartor Type Low Voltage Capacitors

Description of the AsVartör Type Capacitors:

AsVartör Capacitors are called at the same time ? **Metal Armature type capacitors** ?. Their technology is different from some other capacitors which are made from metalized PP. The dielectric is low loss roughed polypropylene film, the electrodes are consist of special Aluminium foils. Few layers of PP and two layers of Aluminium foils are wound into flattened soft windings. The terminals are connected to the windings with tin plated copper and wires.The windings are named the Capacitor Elements. The capacitor consist of a number of flat elements. That elements have low power and voltage. They are connected in parallels, series for building up higher power and voltages. The elements are formed and wrapped in packs and put in the steel container. After assembling of capacitors, they are put in the autoclave in 3.10^{-3} mbar vacuum conditions for drying and impregnation of the dielectric. The impregnating agent is non toxic and environment compatible. It biodegrades quickly in the ambient. Therefore no special precautions are required to prevent the impregnating agent dispersion into the ground. That agent is consist of carbon, hydrogen and oxygen.

LONG LIFE:

KONDAS AsVartör Capacitors are described "% 100 All Film Capacitors". That capacitors have low loss material and projected high stress.They are capable to resist abnormal network conditions. Due to the that fact; KONDAS CAPACITORS are long lasting.

CONSTRUCTIONS:

Low loss polypropylene film, Aluminium foil, dielectric oil and insulation materials.

APPLICATIONS:

AsVartör type capacitors have been designed for reactive power compansation on love voltage side of electrical networks and industrial plants in heavy duty conditions. Becouse of their inherent reliability is affected mostly by design, quality of materials and good manufacturing hard ware. That capacitor units are used in automatic or manual power factor correction panels for low voltage.

PRODUCTION RANGE:

Other than values of voltage, capacity and temperature than those stated in the tables are also included in our production line.

NON POLLUTING:

All the materials used on KONDAS CAPACITORS are non-toxic and completely environmentally compatible.

SPECIAL REQUIREMENTS:

Our technical department is always ready to solve your special requirements.

DIMENSIONS:

As VARTÖR Capacitors have standard dimensions. You can find dimensions and other details in the tables 3,4

Technical Specifications :

Rated Output: **As shown tables**
Operating Temperature Range: **-25/D (-25 / +55 °C)**
Capacitance Tolerance: **-5 +10 %**

Working Voltages (Un): **400 V (others as shown table 6)**
Working Frequency: **50, (other frequency avaible if requested)** ***Impregnating Fluid:*** **Biodegradable and non-PCB**
Installation: : **Indoor or Outdoor**
Permitted Over Voltages: **As shown tables 1,2**
Permitted Over Current: **1.4 In (or 1.6 In if network harmonics exist)**
M12 Nuts of Terminals Torque: **10 N.m**
Dielectric Losses (Tand -dissipation fact.): **<0.15 W/KVAr**
Test Voltage Between Terminals: **2,15 Un AC, 2 sec**
Test Voltage Between Terminals and Case: **3 KV AC, 10 sec**
Fuses: **All elements inside have internal fuses.**
Altitude: **2000 m. a.s.l.**
Discharge Resistor: **Internal or External . 50 V after 60 sec**
Referance Standards: **TS 804; IEC 9 31-1/2 (*);**
KONDAS Quality Assurance Standards: **ISO 9002**
Our Quality System is described in KONDAS Quality Manual
(*)-Approval pending

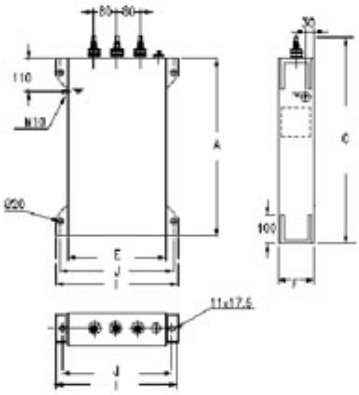

İLGİLİ TABLOLARI GÖRMEK İÇİN TIKLAYINIZ

Copyright © 2009 Kondaş A.Ş.
Mumhane cad. Emek İş Hanı No: 31 /1 PK: 80030 Karaköy / İstanbul TÜRKİYE
Tel:(0212) 251 53 45 - 244 01 50 Fax:(0212) 244 00 04